your comfort. **our world.**

Daikin Solar Thermal Systems

Renewable energy from the sun

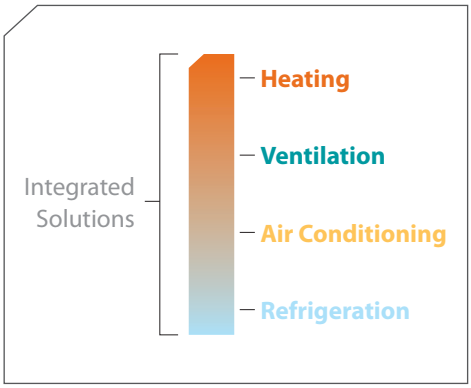

Daikin Solar Thermal Systems

Daikin Solar Thermal Systems feature the latest solar thermal panel technology to harness renewable, inexhaustible, energy from the sun.

As a system manufacturer with extensive experience in development and manufacturing renewable systems, Daikin is continuously updating and expanding its manufacturing facilities and are acknowledged as leading in their field in Europe.

Daikin UK is a nationwide company with headquarters in Weybridge, Surrey and regional offices in Birmingham, Bristol, Manchester and Glasgow to support your local needs.

Daikin manufactures solar panels and provides all key system components for the complete hot water system. All components are optimised and designed to work together to ensure the greatest energy efficiency and highest level of comfort.

Daikin systems use tried and tested technology to suit every requirement

As a global leader with more than 50 years experience in the design and manufacture of heating and cooling technology, Daikin provides a comprehensive choice of domestic heating and renewable energy products which are ideally suited to the UK housing market. With our extensive range of high efficiency heat pumps and solar thermal systems, we offer the most advanced solutions for new builds, renovation projects and retrofit installations – from detached rural homes and harder to heat older properties to city centre apartment schemes and affordable housing.

Heating and renewables

Over recent years, Daikin's product portfolio has expanded from air to water heat pumps to solar thermal technology and underfloor heating, suitable for residential and commercial sectors. Benefitting from more than 35 years experience of solar thermal design and manufacturing, Daikin offers a reliable and wide range of solar solutions.

Daikin's efficient heating solutions make maximum use of the renewable energy all around us, converting free heat from the air and the sun to deliver completely reliable and controllable heating and hot water for homes, even when temperatures outside are below zero.

Daikin systems connect seamlessly

Daikin solar systems are perfect partners for Daikin Altherma air to water heat pumps and ROTEX GasSolarUnits. When also combined with underfloor heating, fan convectors or other heat emitters, the full Daikin range creates a highly economical, versatile and energy efficient home heating system.

For further details on other product ranges, please contact Daikin.

Why use solar?

Solar thermal technology is a way of using solar panels to harness solar energy for hot water systems.

The fossil fuel based energy sources that we use today are limited and precious with prices continuously rising.

Energy must be used in the most efficient way possible to minimise consumption costs and to protect the environment. At the same time renewable energy should be used as much as possible to reduce dependency on fossil fuels, to protect the environment, and importantly, to meet international and Government targets on reducing CO_2 emissions.

Using solar thermal energy is a very effective method of displacing other primary energy to provide hot water.

A well designed solar system is able to deliver as much as 60% of a home's typical hot water demand over the year. Solar thermal systems are also an ideal partner for today's advanced heat pump systems.

Daikin Solar Systems feature the latest solar thermal technology to harness renewable, free energy from the sun. The Daikin Solar range is suitable for domestic hot water preparation for domestic and light commercial use.

The UK receives approximately 900-1200 kWh of solar energy per square metre land area each year. This is sufficient energy to meet up to 100% hot water demand in the summer from a well designed domestic solar thermal system. Daikin solar panels are able to utilise direct and diffuse radiation from the sun.

Thus even on cloudy days, where diffuse radiation is present the panels will be able to utilise solar energy and convert it into heat.

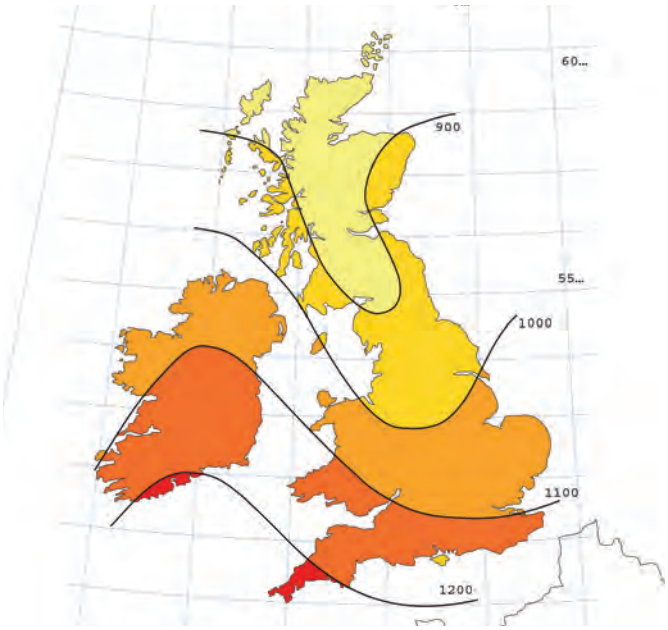

Above: Map showing the total average solar irradiation falling on a one square metre surface on the ground, measured in kilo-watt hours (kWh). This shows that the sun's rays falling on the ground range from more than 1200 kWh m^2 in the far south west of the UK, to approx 900 kWh m^2 in central and northern Scotland.
Reproduced with permission from Solar Trade Association.

How does solar thermal technology work?

Daikin high-performance solar panels are specially designed to maximise the energy which is absorbed and converted into useful heat.

How do the solar panels work?

Daikin highly efficient solar panels absorb solar energy and convert it into useful heat. The solar panel is constructed with a single pane safety glass with 92% transmission rate and a highly selective coated aluminium absorber plate. The 50mm mineral wool insulation reduces heat loss through the panel, thus increasing efficiency. The highly selective coating on the panel surface is designed to utilise shortwave solar radiation and convert it into heat.

How does the system work?

The **pressurised solar system** is filled with a glycol antifreeze solar fluid which collects the energy and transfers it to the hot water cylinder. Temperature sensors are installed in the solar panel array and in the hot water cylinder. The solar controller monitors the temperatures and determines when to switch on the solar pump. As soon as the temperature of the solar fluid in the solar panel exceeds the cylinder temperature by a predetermined value, the digital solar control starts the solar pump and charges the cylinder. Solar heat is then transferred from the solar panels into the hot water cylinder.

The **drainback solar system** utilises a thermal store for hot water collection. Water within the store is passed through the solar panels to collect energy and drains back into the store. This system does not require glycol or a solar fluid collection vessel, as the thermal store collects the drained solar fluid, resulting in lower maintenance costs.

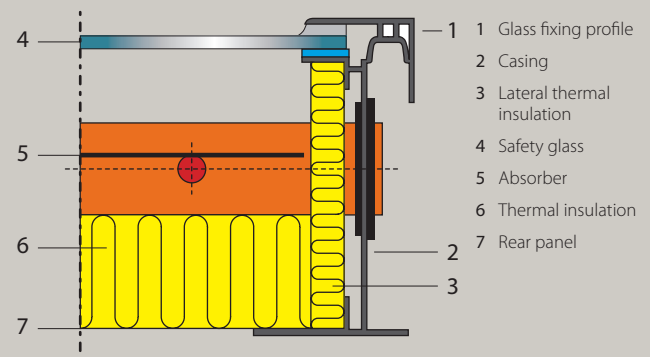

Above: Cross section of a Daikin solar thermal panel

Daikin hot water comfort

The Daikin **pressurised solar system** is designed for the Daikin Altherma Low Temperature air-water heat pumps. A specially designed solar enabling kit is fitted to the Daikin hot water cylinder and means that the cylinder can be heated by the Daikin solar system or by the Daikin Altherma heat pump.

The solar hot water enabling kit has an external solar heat exchanger to transfer solar energy to the hot water cylinder. This means that the whole cylinder is heated by the solar thermal system or by the Daikin Altherma heat pump for maximum efficiency and hot water comfort, and means that there are no cold spots in the cylinder.

The Daikin **drainback solar system** is designed for use with Daikin Altherma High Temperature air-water heat pumps. The solar pump station and controller are fixed onto the front of the thermal store and the whole volume can be heated by solar energy.

The intelligent heat pump controller works in solar priority mode and ensures that when there is sufficient solar gain, the heat pump is disabled to ensure maximum hot water efficiency. Whenever additional energy is needed such as during cloudy days, the air source heat pump is then activated for hot water support.

Typical LT system with pressurised solar thermal system

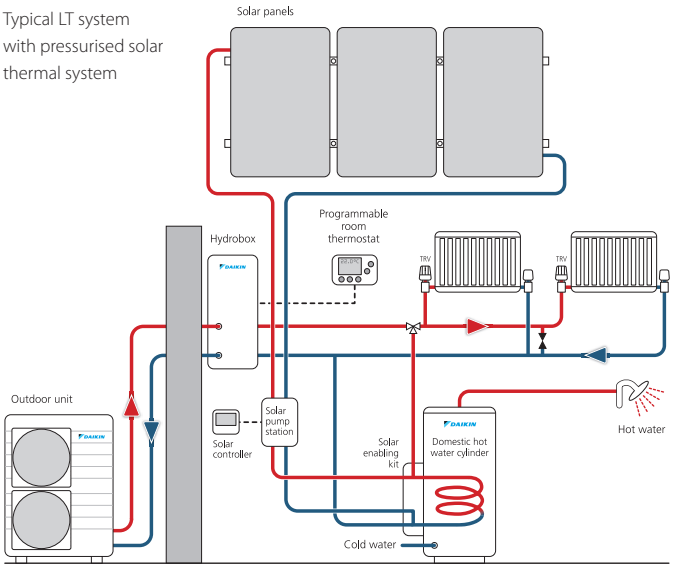

Why consider solar thermal?

A solar hot water system will help to protect the environment by using a free source of energy to generate hot water. Combining the Daikin Altherma low or high temperature heat pump system with a solar thermal system, offers a fully integrated renewable package, designed to work together for optimum performance and maximum efficiency.

Meeting Building Regulations

New buildings must comply with the Building Regulations Part L and they are also required to meet the Code for Sustainable Homes. All homes must also have an Energy Performance Certificate when they are sold. A solar thermal system will help towards meeting these challenging targets by providing energy from a renewable source. For new build and refurbishment alike, solar energy can help to provide an environmentally sound solution towards reducing CO_2 emissions from the home and meeting the legislation in place now and in the future.

Benefits for homeowners

Hot water throughout the year: The solar system works all year round. An auxiliary heat source, such as a heat pump, will be needed to supplement the solar system during the winter months.
Cut energy bills: Sunlight is free, so once the initial installation has been paid for, the costs for heating hot water will be significantly reduced.
Reduced carbon footprint: Solar hot water is a renewable heating system and doesn't release any harmful carbon dioxide or other pollutants while it is running. The sun is a free, clean and reliable energy source.

Features and benefits

Daikin solar panel:

- High efficiency flat plate panels for maximum solar gain
- Selective absorber coating for highest efficiency
- Quick and easy installation with a variety of installation kits
- Robust panel design with toughened glass for peace of mind
- Highly insulated (50mm) for improved efficiency

Daikin solar system:

- Intelligent control to optimise solar energy usage
- Simple and reliable technology
- CO_2 reduction, environmental benefits
- Daikin solar system and Daikin Altherma heat pump helps towards achieving high levels in the Code for Sustainable Homes
- Automatic and controlled solar pump speed for maximum efficiency
- Can be retrofitted to existing Daikin heat pump installations
- Range of pressurised and drainback systems

How to size the system?

When selecting a system it is important to consider not simply how much energy the solar panel can gather under optimum conditions, but how it will be affected by local site conditions.

Designing an effective solar thermal system

To ensure maximum efficiency, it is important to understand the various factors that influence performance and output – including the size and type of panels used, roof orientation and pitch plus the location of the property.

Solar panels should ideally face south for optimum solar gain. However, they can still be effective if the roof is facing anywhere between east and west through south.

The angle of inclination is also important to the effectiveness of solar panels. The optimum fixed installation angle in the UK for year round performance is 30-45 degrees. In the majority of cases the angle of installation is determined by the existing roof pitch.

It is also important to ensure that the roof is clear from overshading trees or objects, for example chimneys.

Important factors to consider when designing a solar system

There are many factors which need to be considered when designing a solar system, and these are also explained in the Government's approved SAP 2009 design method and are briefly listed below. The overall performance of a solar water system depends on how the hot water system is used eg. daily draw-off patterns and the use of any auxiliary devices.

Factors to consider:

- Annual solar radiation
- Number of people in the home
- Hot water usage patterns
- Available roof area
- Roof orientation and inclination
- Overshading from trees or chimney

Information for SAP assessors (SAP 2009)

Solar panel		EKSV26P	EKSH26P
Gross / Net panel area	m^2	2.6 / 2.36	
Zero loss efficiency	-	0.784	
Heat loss coefficient	W/m^2K	4.25	

Guide to selecting a solar thermal system

Solar panels	1 ($2m^2$)	1 ($2m^2$)	2 ($4m^2$)	2 ($4m^2$)	3 ($6m^2$)	3 ($6m^2$)
Hot water cylinder	150 litres	200 litres	200 litres 300 litres	200 litres 300 litres	300 litres	300 litres

Assumptions:

- Daily hot water requirement = 50 litres per person
- $1m^2$ of panel per person
- 50 litres of hot water storage per $1m^2$ of panel
- Typical south facing at 30-45° inclination

Fixing systems for every roof type

The Daikin range of solar panels come with options to meet any installation requirement. Highly efficient Daikin solar panels are available in vertical and horizontal orientation for on-roof, in-roof and flat roof applications.

Daikin solar flat plate panel

- For pressurised and drainback systems
- Highly efficient flat plate aluminium panel
- 2.3m² net panel area
- Solar Keymark certified
- Installation angle 15-80 degrees
- 50mm mineral wool insulation
- Laser welded and harp shaped collector inside
- Slimline 85mm deep panel
- 10 year panel warranty*
- For pressurised and drainback solar systems

* Further details on request

EKSH26P

Performance and technical characteristics

Solar panel			EKSV26P	EKSH26P
Position			Vertical	Horizontal
Dimensions	HxWxD	mm	2000x1300x85	1300x2000x85
Weight		kg	42	
Max. operating pressure		Bar	6	
Max. standstill temperature		°C	200	

Roof fixing options:

On-roof:

These roof fittings are more suited to fixing solar panels to existing properties as they are mounted on top of the roof tiles.

In-roof:

Designed to fit seamlessly into the building roof schedule as they are installed in the roof structure. Daikin solar panels are low profile and when fitted in-roof offer an improved aesthetic look.

A-frame:

Designed for flat roof and ground installations. The angle of pitch can be adjusted to suit location and preference. Easy to fit, install and provide solar for any location.

Daikin solar panels have **Solar Keymark certification**, which is the European quality label for solar thermal panel.

This accreditation certifies that the Daikin solar panels (models EKSV26P and EKSH26P) comply with EN 12975. The Solar Keymark certification helps customers to select quality assured solar panels. Daikin solar panels are listed on the Solar Keymark Collector international database.

For an up to date list of products awarded the Solar Keymark, go to **www.estif.org/solarkeymark** and click 'products'.

011-7S1016 F

Daikin solar pack components

Daikin solar packs are designed for easy ordering and installation. All the necessary components are included in packs and are designed to fit easily together. Optional solar accessories can be ordered separately if needed. Daikin solar packs include the following as standard:

- Solar panels
- Roof fixings
- Mounting rails and solar connection kit
- Solar pump station
- Solar controller
- Solar flow sensor (pressurised only)
- Solar fluid (pressurised only)
- Roof flashing (drainback only)

Daikin components have been inherently designed to work seamlessly together for the most efficient, hassle free and safe installation and operation.

Solar pump station and flow sensor

- Pressurised solar pump station with Grundfos solar 25-65 pump
- Automatic pump speed control
- Flow and return temperature gauges
- Safety valve and pressure gauge
- Expansion vessel gauge
- Filling valves
- The drainback controller contains the pump station

Daikin solar controller

- Differential temperature controller
- Temperature sensors
- Supplied with connection and extension cables for easy installation
- Frost and leak protection
- Compatible with Daikin Altherma heat pump

Above: Daikin solar pump station

Above: Drainback solar controller and pump station

Performance and technical characteristics				
			Pressurised	Drainback
Solar pump station			**EKSRDS1A**	**EKSRPS3**
Dimensions	HxWxD	mm	410x240x130	230x815x142
Power supply			230V/50Hz	
Solar panel circulation pump			Grundfos Solar 25-65 130	Grundfos UPSO 15-65 & UPS 15-65
Max. electric power consumption of the pump		W	52	120
Max. operating pressure		bar	6	-
Max. pump capacity		m^3/h	2	-
Pressure gauge		bar	0-10	-
Temperature range		°C	0-120 (short-term 160)	-
Connections			4x 1 1/4" female for Ø 22 clamping ring bolt	-
Solar controller			EKSR3PA	-
Dimensions	HxWxD	mm	332x230x145	230x815x142
Power supply			230V/50Hz	
Control			Digital differential temperature regulator with plain text display	
Max. electric power consumption of the control system		W	2	2

Mounting rails and solar connection kit

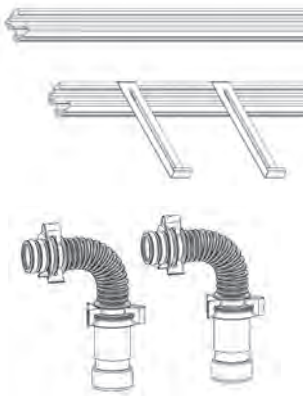

> Mounting rails for connection to roof brackets and hangers to mount solar panels

> Quick coupling solar connections and 22mm compression fittings to field piping

> 2m UV resistant heat insulation included

> Pipe clamps and connection fittings

> Available for pressurised and drainback solar

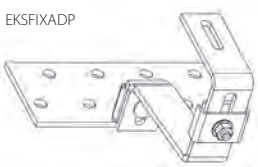

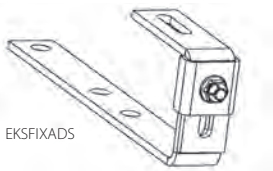

Roof fixings options

The following on-roof fixing options are available in the solar packs:

> **EKSFIXADP:** Suitable for curved roof tiles, with a double height adjustable feature

> **EKSFIXADS:** Suitable for flat tiles, with a single height adjustable feature

Also available separately to order:

> **EKSFIXWD:** Suitable for corrugated roofing

> **EKSFIXBD:** Suitable for metal roofing types

Solar accessories

A full range of optional accessories are available to complete the solar installation:

> Solar pipework for pressurised and drainback solar

> Solar pipework extension kit

> Expansion vessel with bracket and flexi hose (25L and 35L)

Daikin solar packs

Solar packs quick reference table

System type	Orientation	Fixing type	Tile	Roof cowl	1 panel pack	2 panel pack	3 panel pack	4 panel pack	5 panel pack
Pressurised	Vertical	On-roof	Profiled tile	-	UK.SP1VPP	UK.SP2VPP	UK.SP3VPP	-	-
			Slate/flat tile		UK.SP1VSP	UK.SP2VSP	UK.SP3VSP		
		In-roof	Profiled/slate/ flat tile		-	UK.SP2VIP	UK.SP3VIP		
		A-frame	-		UK.SP1VAP	UK.SP2VAP	UK.SP3VAP		
	Horizontal	On-roof	Profiled tile		UK.SP1HPP	UK.SP2HPP	UK.SP3HPP		
			Slate/flat tile		UK.SP1HSP	UK.SP2HSP	UK.SP3HSP		
		A-frame	-		UK.SP1HAP	UK.SP2HAP	UK.SP3HAP		
Drainback	Vertical	On-roof	Profiled tile	Anthracite	UK.SP1VPDBA	UK.SP2VPDBA	UK.SP3VPDBA	UK.SP4VPDBA	UK.SP5VPDBA
				Red	UK.SP1VPDBR	UK.SP2VPDBR	UK.SP3VPDBR	UK.SP4VPDBR	UK.SP5VPDBR
			Slate/flat tile	Anthracite	UK.SP1VSDBA	UK.SP2VSDBA	UK.SP3VSDBA	UK.SP4VSDBA	UK.SP5VSDBA
				Red	UK.SP1VSDBR	UK.SP2VSDBR	UK.SP3VSDBR	UK.SP4VSDBR	UK.SP5VSDBR
		In-roof	Profiled/ Slate/Flat tile	Anthracite	-	UK.SP2VIDBA	UK.SP3VIDBA	UK.SP4VIDBA	UK.SP5VIDBA
				Red	-	UK.SP2VIDBR	UK.SP3VIDBR	UK.SP4VIDBR	UK.SP5VIDBR
		Flat-roof	-	Anthracite	UK.SP1VADBA	UK.SP2VADBA	UK.SP3VADBA	UK.SP4VADBA	UK.SP5VADBA
				Red	UK.SP1VADBR	UK.SP2VADBR	UK.SP3VADBR	UK.SP4VADBR	UK.SP5VADBR
	Horizontal	On-roof	Profiled tile	Anthracite	UK.SP1HPDBA	UK.SP2HPDBA	UK.SP3HPDBA	UK.SP4HPDBA	UK.SP5HPDBA
				Red	UK.SP1HPDBR	UK.SP2HPDBR	UK.SP3HPDBR	UK.SP4HPDBR	UK.SP5HPDBR
			Slate/flat tile	Anthracite	UK.SP1HSDBA	UK.SP2HSDBA	UK.SP3HSDBA	UK.SP4HSDBA	UK.SP5HSDBA
				Red	UK.SP1HSDBR	UK.SP2HSDBR	UK.SP3HSDBR	UK.SP4HSDBR	UK.SP5HSDBR
		Flat-roof	-	Anthracite	UK.SP1HADBA	UK.SP2HADBA	UK.SP3HADBA	UK.SP4HADBA	UK.SP5HADBA
				Red	UK.PS1HADBR	UK.PS2HADBR	UK.SP3HADBR	UK.SP4HADBR	UK.SP5HADBR

Use the table above to select the correct solar pack for your project.

Service dedicated to your needs

When you select a Daikin system, you can depend on absolute quality and reliability, both of our products and of our service.

Find an installer

Daikin Altherma installers are featured on the Find an Installer page, which offers a fast way to quickly locate your nearest installer. Go to **www.daikinheating.co.uk** for:

> A database of Daikin installers in your local area

> Identification of MCS certified installers

> Links to local installers' website

Contact details

Pre-sales enquiries
Please contact your local regional sales office

After sales technical support
0845 641 9200
0845 641 9277

Warranty
0845 641 9275

Training
0845 641 9260

Regional offices

For pre-sales, technical and to place your order:

Midlands region
0845 641 9370

South London
0845 641 9355

Northern region
0845 641 9340

Scottish region
0845 641 9330

North London
0845 641 9360

Western region
0845 641 9320

Email
heating@daikin.co.uk

Installer training courses

Daikin Solar Training courses

For experienced solar installers, Daikin offer solar product training at each training centre. Please contact our training centre for booking onto our 1 day course.

For new solar installers, it is strongly recommended that the installer first follow an MCS accredited training course, such as BPEC or LOGIC.

These courses are offered by Dakin partner colleges and further details are available from our training team.

BPEC solar thermal course

This course is designed for new solar DHW installers and is specifically designed for experienced heating installers. Please note to comply with current legislation, G3 certification is required to install unvented hot water cylinders and is usually a prerequisite to this course.

Logic solar thermal course

This course is aimed at heating engineers wishing to gain further qualifications and skills in solar hot water heating systems.

Daikin solar training (SE22)

The course offers familiarisation of the Daikin solar range and explains Daikin solar thermal systems (pressurised and drainback), Daikin solar demonstration equipment is also available to view and the attendee will learn how systems operate.

The course explains the principles of selection, design, installation and maintenance of domestic solar hot water systems.

your comfort. **our world.**

Qualified for Energy Technology List
www.eca.gov.uk
Authorised User No. 00061

DAIKIN UK RECYCLING
END OF LIFE AIR CON UNITS

FSC
www.fsc.org
MIX
Paper from responsible sources
FSC® C017916

WORLD LAND TRUST™
www.carbonbalancedpaper.com
CBP000090080312280 7

011-7S1016F

APPROVED PRODUCT
MCS
BRE GLOBAL LISTED
MCS HP0006

Visit **www.eca.gov.uk/etl** and type 'Daikin' in the quick search box for details of the latest ECA qualifying Daikin units

LLOYD'S REGISTER QUALITY ASSURANCE ISO9001
UKAS QUALITY MANAGEMENT 001

LLOYD'S REGISTER QUALITY ASSURANCE ISO 14001
UKAS ENVIRONMENTAL MANAGEMENT 001

EUROVENT CERTIFIED PERFORMANCE

Daikin Europe N.V. participates in the Eurovent Certification Programme for Air Conditioners (AC), Liquid Chilling Packages (LCP) and Fan Coil Units (FC); the certified data of certified models are listed in the Eurovent Directory. Multi units are Eurovent certified for combinations up to 2 indoor units. VRV products, Rooftops, FWB-J and FWD-units are not within the scope of the Eurovent Certification Programme.

CE

Daikin units comply with the European regulations that guarantee the safety of the product.

Daikin products are distributed by:

The present catalogue is drawn up by way of information only and does not constitute an offer binding upon Daikin UK. Daikin UK has compiled the content of this catalogue to the best of its knowledge. No express or implied warranty is given for the completeness, accuracy, reliability or fitness for particular purpose of its content and the products and services presented therein. Specifications are subject to change without prior notice. Daikin UK explicitly rejects any liability for any direct or indirect damage, in the broadest sense, arising from or related to the use and/or interpretation of this catalogue.

UKEPCEN12-9/20/ 02.12 / Shere Marketing. Copyright 2012 Daikin
Printed in the UK on FSC certified paper from sustainable sources.

Daikin Airconditioning UK Limited The Heights Brooklands Weybridge Surrey KT13 0NY Tel 0845 6419000 Fax 0845 6419009 www.daikin.co.uk

Scotland Region	Northern Region	Midlands Region	Western Region	North London	South London
0845 641 9330	0845 641 9340	0845 641 9370	0845 641 9320	0845 641 9360	0845 641 9355